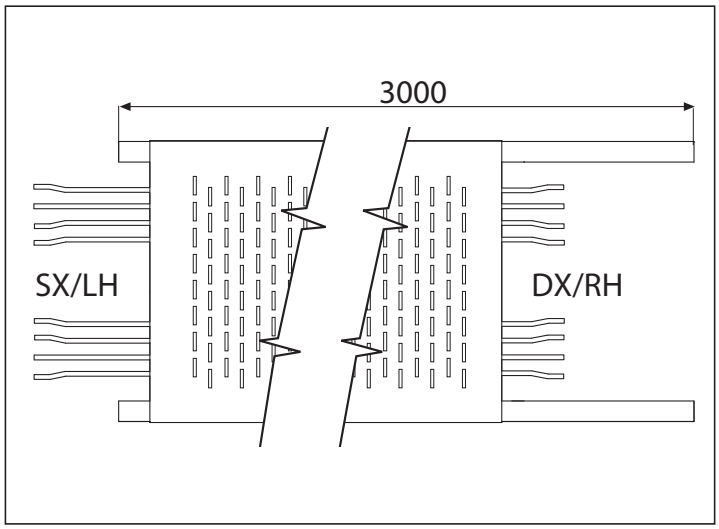
3000
SX/LH
DX/RH

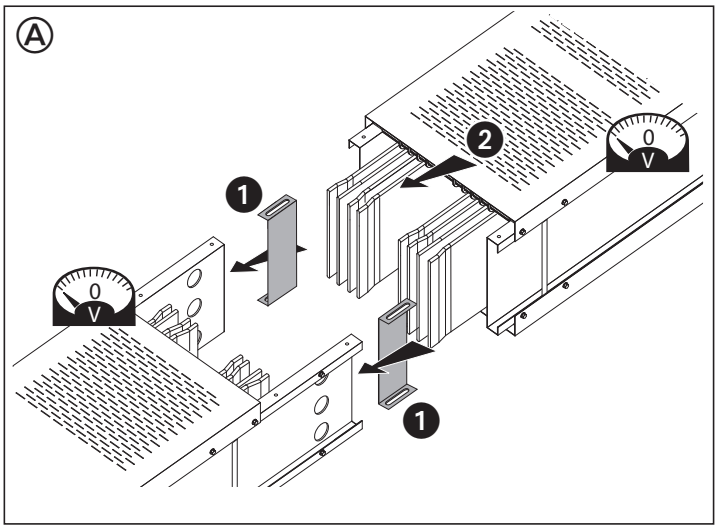
A
1
2
1
0
V

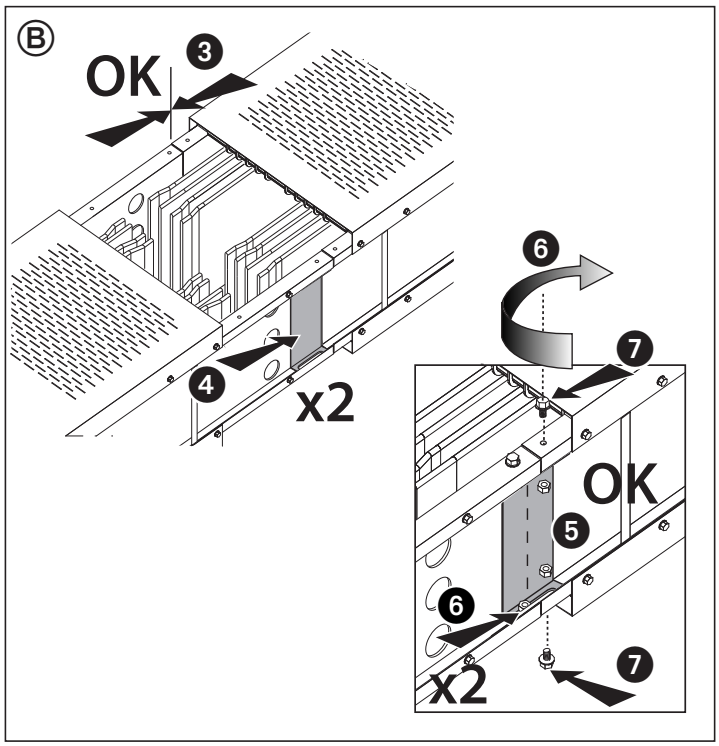
B
OK
3
4
x2
6
7
OK
5
6
x2
7

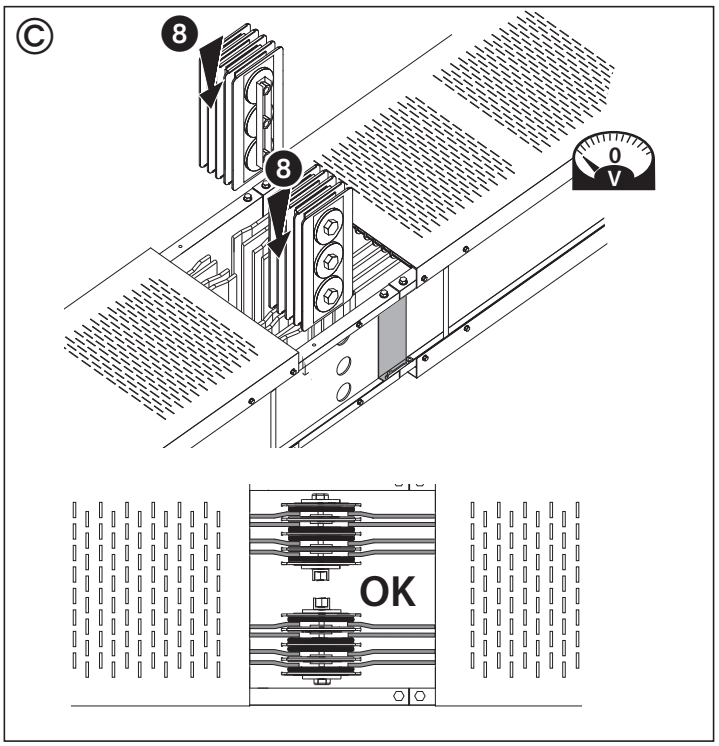
C
8
8
0
V
OK

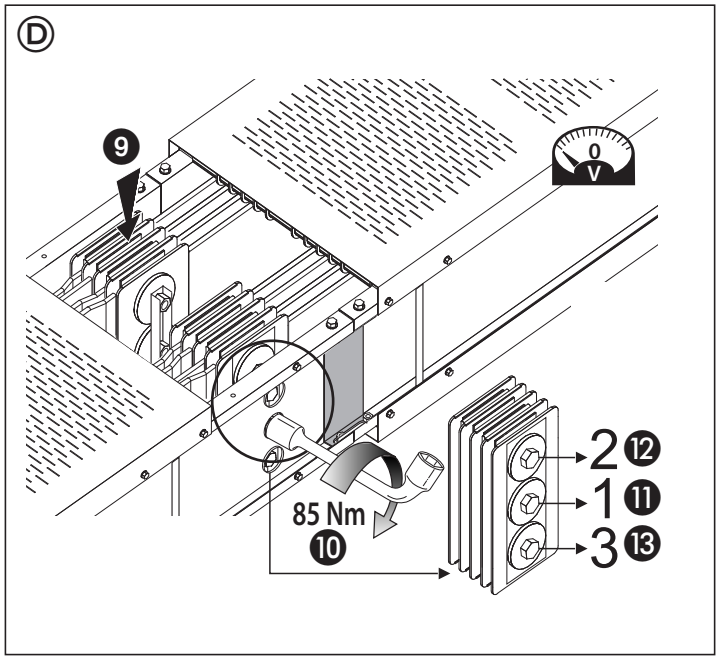
D
9
0
V
85 Nm
10
2 12
1 11
3 13

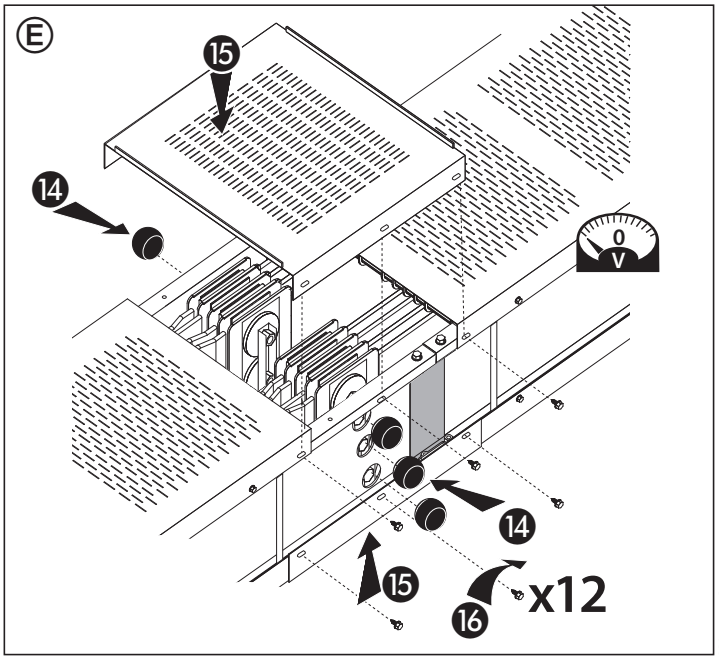
E
15
14
0
V
14
15
16
x12